Pro Club Line

by Body-Solid®

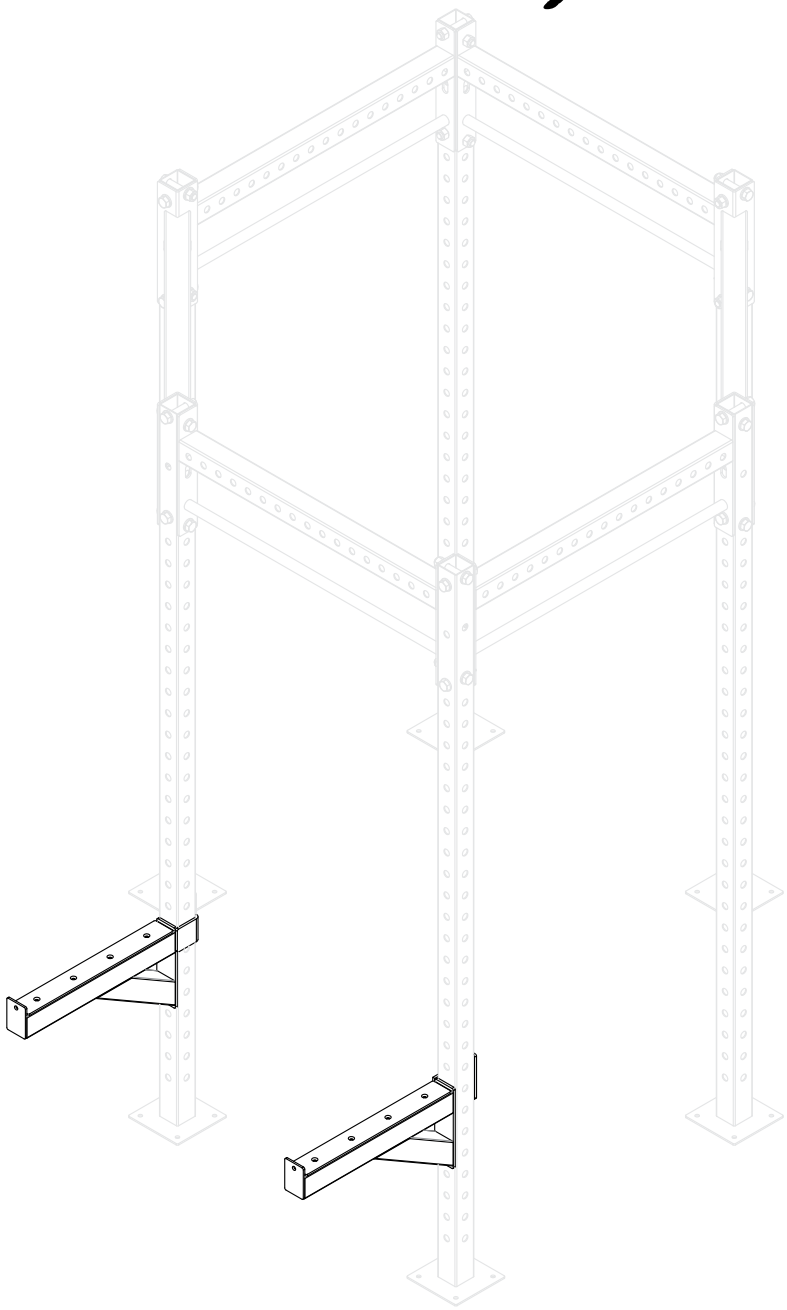

SAFETY CATCHES

MODEL # SR-SC

Assembly & Instructions

OWNER'S MANUAL

V. SR-SC-051614

Be sure that all users carefully read and understand all warning, safety and maintenance labels on the machine before each use. Failure to do so may result in death or serious injury.

It is imperative that you retain this Owner's Manual and be sure all warning labels are legible and intact. Replacement Owner's Manuals and warning labels are available from your local Body-Solid dealer.

If you have any questions about the operation, set up or maintenance of this machine please call our customer service department at 1 (800) 556-3113.

CAUTION

THERE IS A RISK ASSUMED BY INDIVIDUALS WHO USE THIS TYPE OF EQUIPMENT. TO MINIMIZE RISK, YOU MUST FOLLOW THESE RULES:

Inspect equipment before each workout.
Check that all nuts and bolts are in place and fully tightened.
Also, before use, check for signs of wear. Replace all worn parts immediately.
Never use equipment if any parts are damaged or missing.

FAILURE TO FOLLOW THESE RULES MAY RESULT IN INJURY.

Exercise with care. Perform your exercise at a smooth, moderate pace; never perform jerky or uncoordinated movements that may cause injury.
DO NOT allow children or minors to play on or around this equipment.
If unsure of proper use of equipment, call your local Body-Solid distributor or the Body-Solid customer service center at (800) 556-3113.
Consult your physician before starting your exercise program.
For your own safety, DO NOT begin any exercise program without proper instruction.

Table of Contents

- SAFETY INSTRUCTIONS..... PAGE 4
- PREPARATION..... PAGE 5
- ASSEMBLY INSTRUCTIONS..... PAGE 6
- HARDWARE & PART LIST..... PAGE 8
- EXPLODED VIEW..... PAGE 9
- CONTACT PAGE..... PAGE 10

Important Safety Instructions

Before beginning any fitness program, you should obtain a complete physical examination from your physician.

Il est conseille de subir un examen medical complet avant d'entreprendre tout programme d'exercise.
Si vous avez des etourdissements ou des faiblesses, arretez les exercices immediatement.

Antes de comenzar cualquier programma de ejercicios, deberias tener un examen fisico con su doctor.

When using exercise equipment, you should always take basic precautions, including the following:

- Read all instructions before using the **SR-SC**. These instructions are written to ensure your safety and to protect the unit.
- **Do not remove any safety labels from the machine.**
- Do not allow children on or near the equipment.
- Use the equipment only for its intended purpose as described in this guide. Do not use accessory attachments that are not recommended by the manufacturer. Such attachments might cause injuries.
- Wear proper exercise clothing and shoes for your workout, no loose clothing.
- Keep hands, limbs, loose clothing, and long hair well out of the way of all moving parts.
- Use care when getting on or off the unit.
- Do not overexert yourself or work to exhaustion.
- If you feel any pain or abnormal symptoms, stop your workout immediately and consult your physician.
- Never operate unit when it has been dropped or damaged. Return the equipment to a service center for examination and repair.
- Do not use the equipment outdoors or near water.

Personal Safety During Assembly

- Before beginning assembly, please take the time to read the instructions thoroughly.
- Read each step in the assembly instructions and follow the steps in sequence. Do not skip ahead. If you skip ahead, you may learn later that you have to disassemble components and that you may have damaged the equipment.

The **SR-SC** is designed for your enjoyment. By following these precautions and using common sense, you will have many safe and pleasurable hours of healthful exercise with your **Pro Club Line by Body-Solid, SAFETY CATCHES.**

After assembly, you should check all functions to ensure correct operation. If you experience problems, first recheck the assembly instructions to locate any possible errors made during assembly. If you are unable to correct the problem, call the dealer from whom you purchased the machine or call **1-800-556-3113** for the dealer nearest you.

Obtaining Service

Please use this Owner's Manual to make sure that all parts have been included in your shipment. When ordering parts, you must use the part number and description from this Owner's Manual. Use only Body-Solid replacement parts when servicing this machine. Failure to do so will void your warranty and could result in personal injury.

For information about product operation or service, check out the official Body-Solid Inc. website at www.bodysolid.com or contact an authorized Body-Solid dealer or a Body-Solid factory-authorized service company or contact Body-Solid customer service at one of the following:

Toll Free: 1-800-556-3113
Phone: 1-708-427-3555
Fax: 1-708-427-3556
Hours: M-F 8:30-5:00 CST
E-Mail: service@bodysolid.com

Or write to: Body-Solid, Inc.
Service Department
1900 S. Des Plaines Ave.
Forest Park, IL 60130 USA

Retain this Owner's Manual for future reference. If you need to order replacement parts please be prepared to provide the following information when contacting us so that we can assist you better.

1. Model Number
2. Place of Purchase
3. Serial Number (S/N)
4. Part # and Description

Preparation

Thank you for purchasing the **SR-SC**. This Rig is part of Pro Club Line by Body-Solid of quality strength training machines, which lets you target specific muscle groups to achieve better muscle tone and overall body conditioning. To maximize your use of the equipment please study this Owner's Manual thoroughly.

Required Tools

The basic tools that you must obtain before assembling the **SR-SC** include but are not limited to:

- Metric Wrench Set
- Adjustable Wrench

Installation Requirements

Follow these installation requirements when assembling the **SR-SC**:

Insert all bolts in the same direction. For aesthetic purposes, insert all bolts in the same direction unless specified (in text or illustrations) to do otherwise.

Leave room for adjustments. Tighten fasteners such as bolts, nuts, and screws so the unit is stable, but leave room for adjustments. Do not fully tighten fasteners until instructed in the assembly steps to do so. The Rig must be bolted to the floor and installed professionally.

Fill out and mail the warranty card.

Assembly Tips

Read all "Notes" on each page before beginning each step.

While you may be able to assemble the **SR-SC** using the illustrations only, important safety notes and other tips are included in the text.

Some pieces may have extra holes that you will not use. Use only those holes indicated in the instructions and illustrations.

NOTE: With so many assembled parts, proper alignment and adjustment is critical. While tightening the nuts and bolts, be sure to leave room for adjustments.

NOTE: The bottles that are marked "Poison" are your touch up paint. Keep away from children.

CAUTION: Obtain assistance! Do not assemble the **SR-SC** by yourself. This could result in injury. Review the installation requirements before proceeding with the following steps.

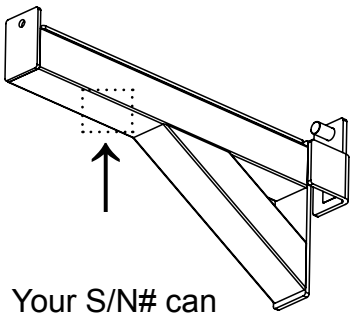

Your S/N# can be found here

Body-Solid continually seeks ways to improve the performance, specifications and product manuals in order to ensure that only superior products are released from our factories. Please take the time to carefully read through this manual thoroughly. Instructions contained in this document are not intended to cover all details or variations possible with Body-Solid equipment, or to cover every contingency that may be met in conjunction with installation, operation, maintenance or troubleshooting of the equipment. Even though we have prepared this manual with extreme care, neither the publisher nor the author can accept responsibility for any errors in, or omission from, the information given. Should additional information be required, or should situations arise that are not covered by this manual, the matter should be directed to your local Body-Solid representative, or the Service Department at Body-Solid Inc. in Forest Park, Illinois.

STEP

1

Be careful to assemble all components in the sequence they are presented.

1. Attach Left and Right Safety Catches (**1&2**) to the Uprights of the Rig.

NOTE:

This attachment is compatible with both the Hexagon Pro (SR-HEXP) and the Hexagon (SR-HEX) Functional Training Rigs.

STEP 1

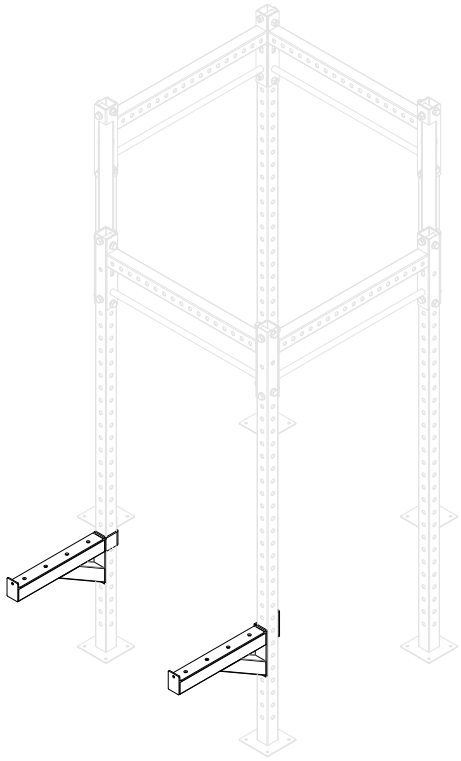

Above shows Step 1 assembled and completed.

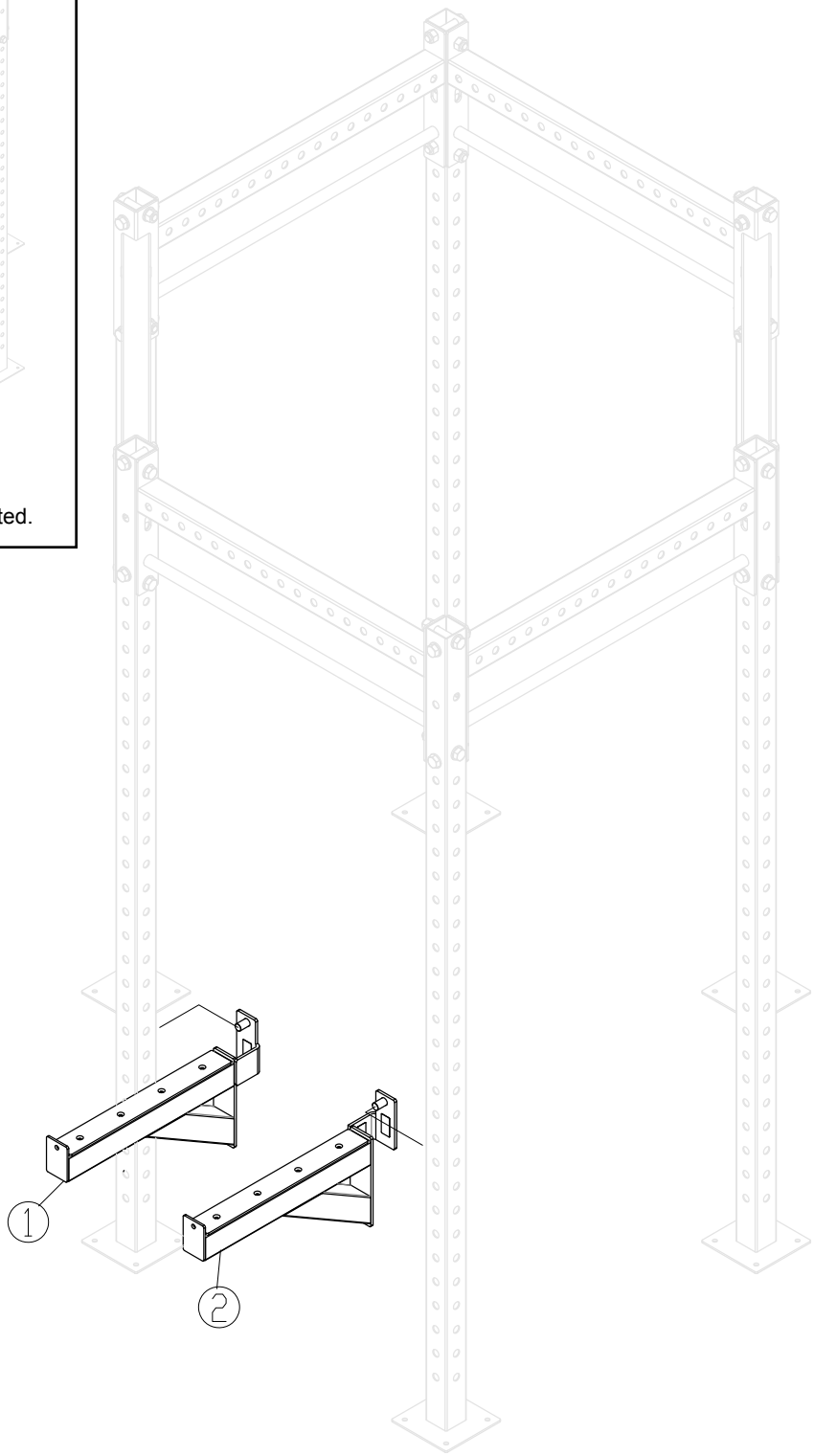

Hardware & Part List

Part#	Description	Quantity
1	RIGHT SAFETY CATCH	1 PCS.
2	LEFT SAFETY CATCH	1 PCS.
3	PVC PAD	2 PCS.
4	M8x20mm FLAT HEAD SCREW	8 PCS.
5	PROTECTIVE FILM	8 PCS

SR-SC Exploded View

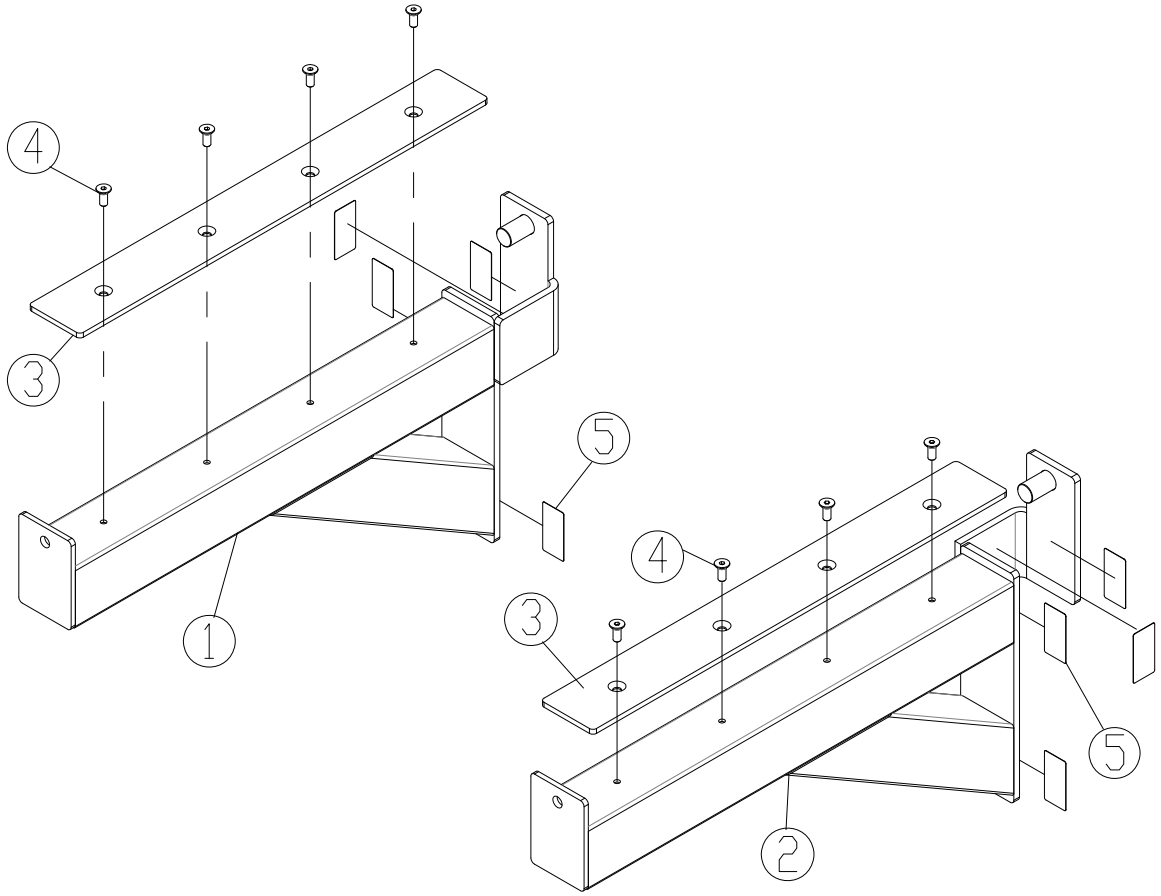

Body-Solid®
Built for Life

SR-SC

PLEASE WRITE YOUR SERIAL NUMBER IN THE BOXES BELOW

S/N # 009394-□□-□□-□□□□-□□□□

1900 S. Des Plaines Ave.
Forest Park, Il 60130
Phone:(708)427-3555
Fax:(708)427-3556
Hours: M-F 8:30 - 5:00 CST

www.bodysolid.com

Copyright 2009. Body-Solid. All rights reserved. Body-Solid reserves the right to change design and specifications when we feel it will improve the product.
Body-Solid machines maintain several patented and patent pending features and designs. All rights reserved on all design patents and utility patents.